MCVIPR

(Multi-Color Visual Indicator Protocol Responder)

Datasheet

PART NUMBER
MCVIPR

CATEGORY
STROBES

Features

Multi-Directional Color Alerting
Multiple color options across five independently controlled directions display different colors to provide guidance during an emergency.

Graphical and Directional Guidance
A central 8×8 LED grid displays graphics in any color, such as evacuation arrows and shelter-in-place symbols, while a simultaneous white flash maintains attention.

Configurable, Protocol-Aligned Alerting
Program alerts with colors and imagery that match SRP or your facility's own safety plan.

Built for Demanding Environments
IP66-rated protection against dust and high-pressure water, UV-resistant materials, and an operating temperature range of -10° to 50° C.

Simple Installation on Existing IP Infrastructure
PoE power and single-gang or double-gang mounting.



Product Overview

MCVIPR (Multi-Color Visual Indicator Protocol Responder) is a PoE-powered visual indicator for IP-based mass notification systems.

Utilizing a center 8×8 LED grid, MCVIPR combines multi-directional alerting, graphic display capability, high-intensity white flash, industry-leading brightness, and programmability in a single indoor/outdoor device.

Patent pending.

InfoComm 2026
Best of Show Award Winner

Dimensions

(Dimensions are subject to change.)

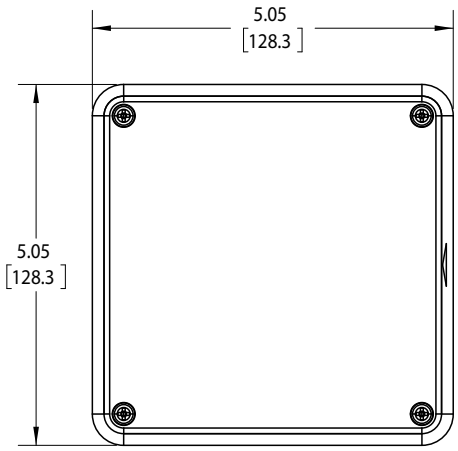

Front

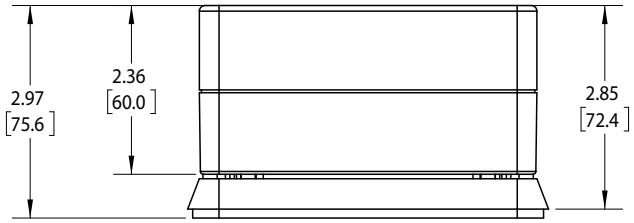

Top

Category	Specifications
Power Input	PoE (IEEE 802.3af)
Ethernet I/F	10/100 Mbps
Luminous Intensity	15, 30, 75, 95, 110, 135, or 185 candela
Flash Rate	Fast (2 Flashes per second), Slow (1 Flash per second), NFPA 72 compliant
Operating Temperature	14˚ TO 122˚ F (-10˚ TO 50˚ C)
Dimensions	5.05” x 5.05” x 2.85”
Warranty	6 Year Limited
Weight	1.0 lb (0.45kg)

(Due to continual product development, specifications are subject to change without notice.)

Advanced Network Devices

Contact Us

847.463.2236

sales@anetd.com

3820 N Ventura Drive
Arlington Heights, IL 60004

anetd.com

CONTACT SALES

DESIGNED, SUPPORTED, AND ASSEMBLED IN THE USA WITH U.S. AND GLOBAL PARTS.