Multi-Color Visual Indicator Protocol Responder Installation Guide

MCVIPR



Installation Instructions

If concerned with line performance, contact ANetD Tech Support at tech@anetd.com for a ferrite. Wrap CAT5 or CAT6 network cable around ferrite once and clamp shut.

TABLE OF CONTENTS PAGE

Compatible Junction Boxes 3

Parts Nomenclature and Assembly Overview 4

Installation Steps 5

STEP 1: Mounting Bracket Install 5

Option A: Installation to External Junction Box 5

Option B: Installation to Flush Wall 6

STEP 2: Strobe Connection and Base Mounting 7

Additional Information 9

Compatible Junction Boxes

Interior

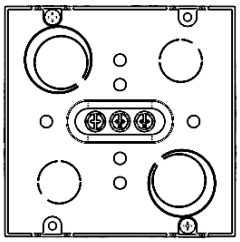

2 Gang

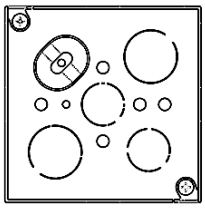

4S

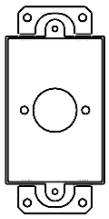

1 Gang

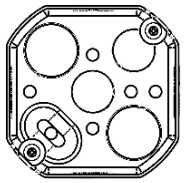

4″ Octagon

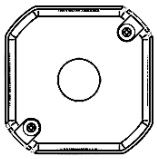

3 ½″ Octagon

Outdoor (Weather Rated)

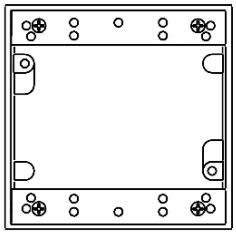

2 Gang
(Metal)

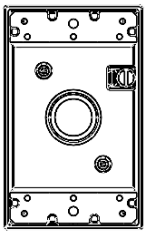

1 Gang
(Metal)

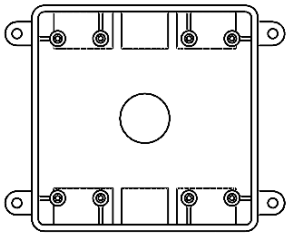

2 Gang
(Plastic)

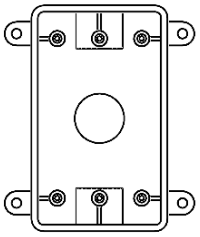

1 Gang
(Plastic)

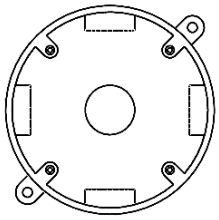

4″ Round
(Plastic)

Parts Nomenclature and Assembly Overview

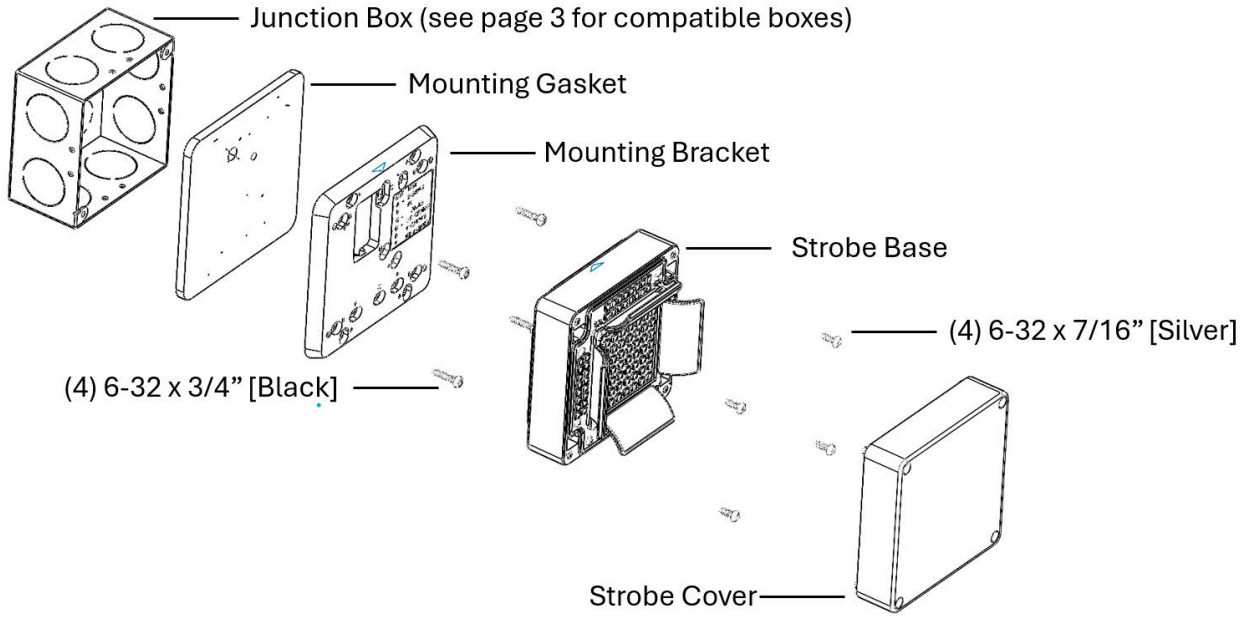

Installation Steps

STEP 1: MOUNTING BRACKET INSTALL

Option A: Installation to External Junction Box

Place the gasket inside the mounting bracket with the gasket hole lined up with the rectangular hole in the mounting bracket. Feed the network cable from the junction box through the rectangular hole on the mounting bracket. Ensure that the solid triangle on top of the mounting bracket is facing up and pointing outward.

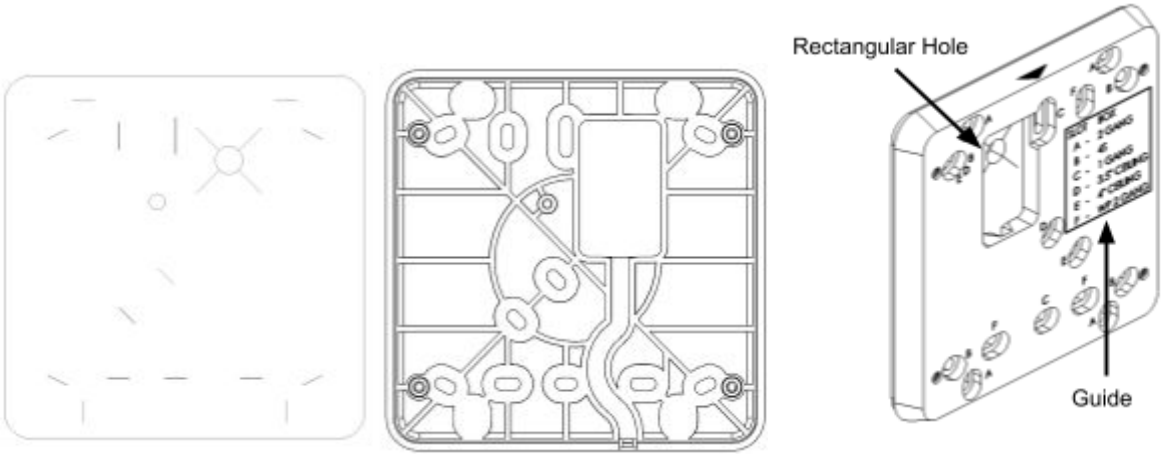

Align the slots on the mounting bracket with the holes on the junction box and use up to (4) black 6-32 x 0.75 screws, included, to secure. The mounting gasket should be in between the junction box and the mounting bracket.The mounting bracket has a guide to help determine the best slots to use for a corresponding junction box. (min 2 Nm torque)

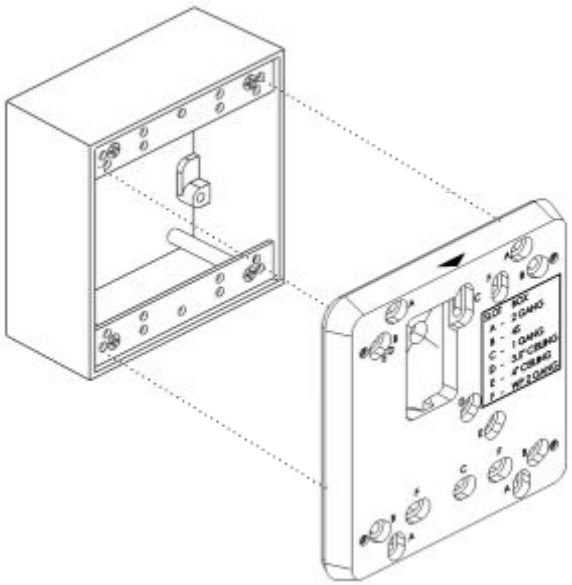

Option B: Installation to Flush Wall

Remove the gasket from the mounting bracket. If the network cable is routed externally from below strobe install location, snap off the indicated tab with pliers. Feed the network cable along the dashed line path (as illustrated on image below) and through the rectangular hole on the mounting bracket. Ensure that the solid triangle on top of the mounting bracket is facing up and pointing outward. Replace the gasket.

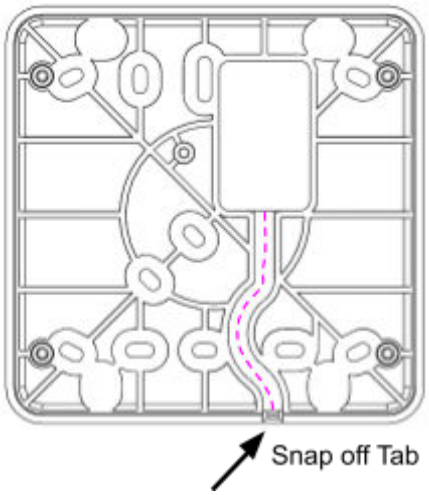

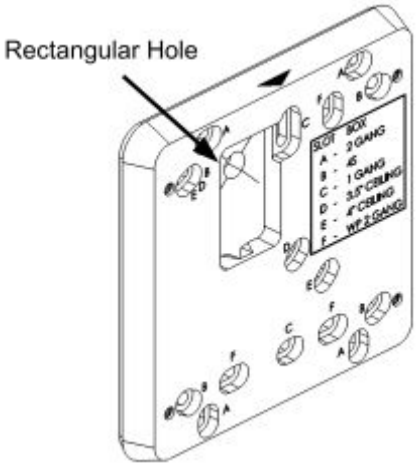

Place the mounting bracket with gasket on the wall with the cable routed out of the bottom and mark the wall using the 'B' slots. Drill and install wall anchors (not provided) and use #6 screws (not provided) in the 'B' slots. (min 2 Nm torque)

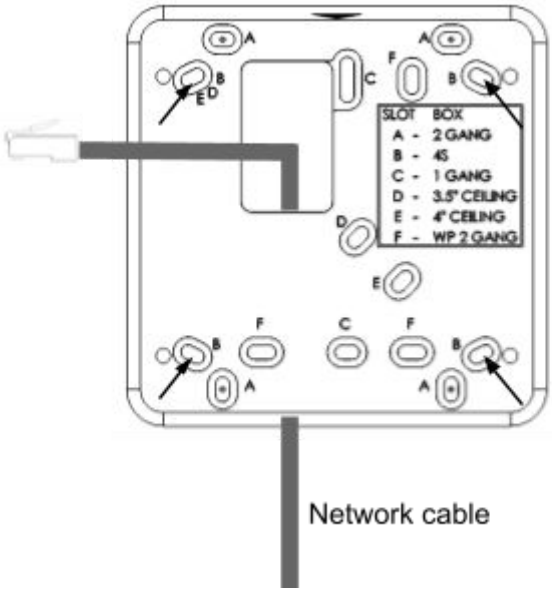

STEP 2: STROBE CONNECTION AND BASE MOUNTING

Feed the network cable through the rectangular hole on the strobe base. Plug the network cable into the jack on the control module located in the strobe. Line up the solid triangle on the strobe base with the solid triangle on the mounting bracket.

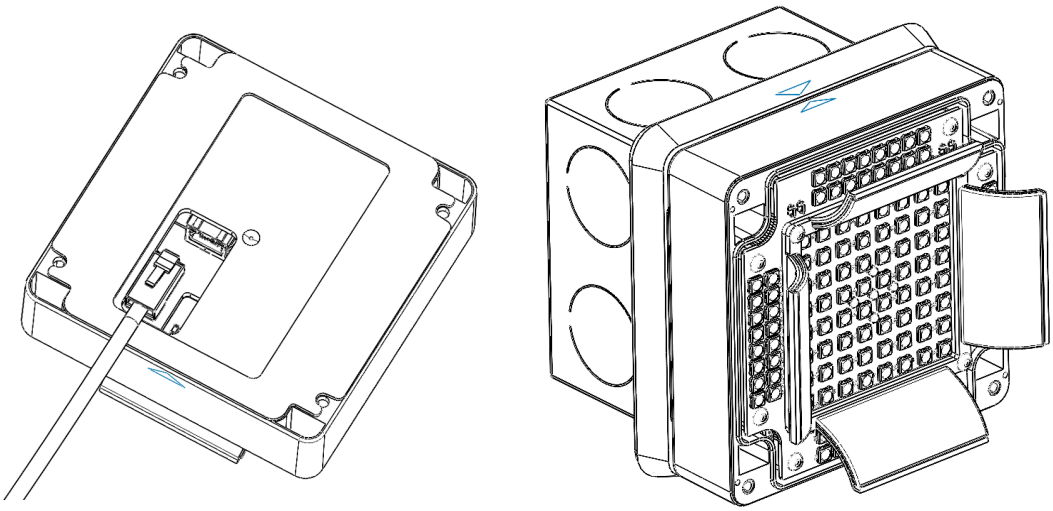

Use the (4) silver 6-32 x 7/16" screws, included, to attach the strobe base to the mounting bracket. (min 1 Nm torque)

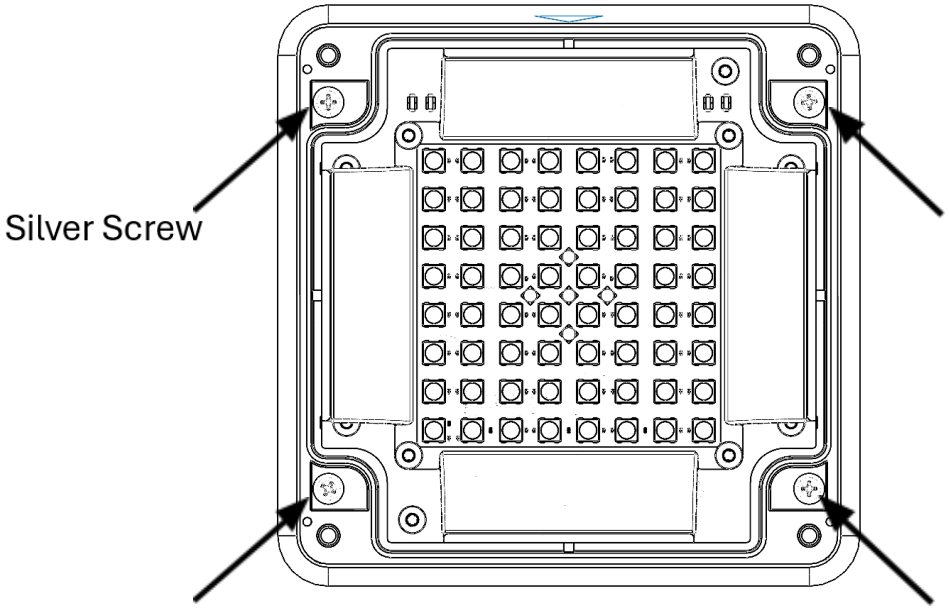

Attach the strobe cover to the strobe base by way of the (4) screws in the strobe cover. (min 1 Nm torque)

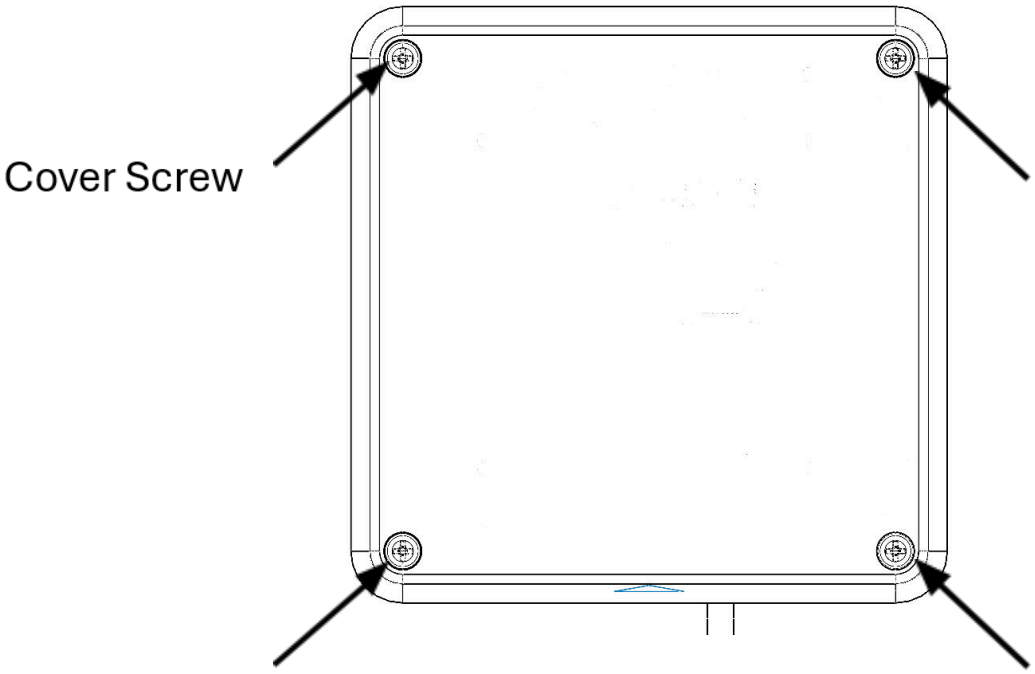

WARNING: The device is water-resistant, not waterproof. Do not pressure wash the exterior as excessive water may enter the enclosure cavity and damage electronic components, which would void the warranty. Failure to do so may void the warranty.

Device Operation

1. Connect the other end of the network cable to a PoE (Power over Ethernet) network switch, or a PoE injector, on a network with a DHCP server. Find some supported equipment options listed at https://anetd.com/resources/prepare-for-installation/

NOTE: ANetD products require an IEEE 802.3af/at/bt compatible switch or injector to correctly classify and supply the power needed for our devices. Use of non-standard PoE powering schemes (such as 24V passive PoE) may cause damage and void your warranty.

2. If properly installed, the unit should boot within 30 seconds. The device will play a jingle when you apply power via the network cable, then beep once initialization completes.
3. Consult the ClockWise User Manual (see https://portal.anetd.com/) or third-party software guide for further instructions on sending audio to the device.

Additional Resources

Support Center: https://anetd.com/resources/
Documentation: https://anetd.com/resources/documentation/
ANetD Warranty: https://anetd.com/warranty/
ANetD Legal Disclaimer: https://anetd.com/legal/